LED Light Link

The universal indicator control unit for trailer conversion.

Product Description

- ✓ If the direction indicator is working (power draw is greater than 1 Watt) a resistor is switched ON.
- ✓ In case of LED failure the power resistor is switched off therefore triggering the failure display output built into the flasher unit.

Outline dimension

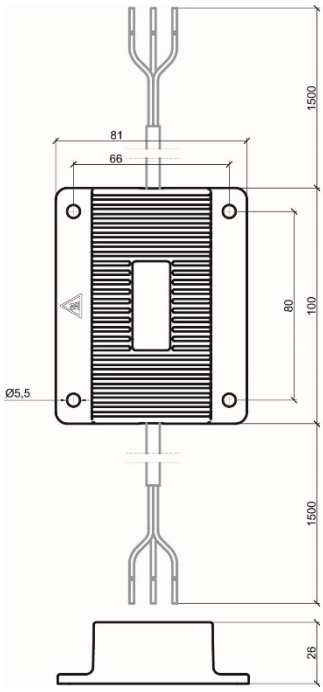

Connection

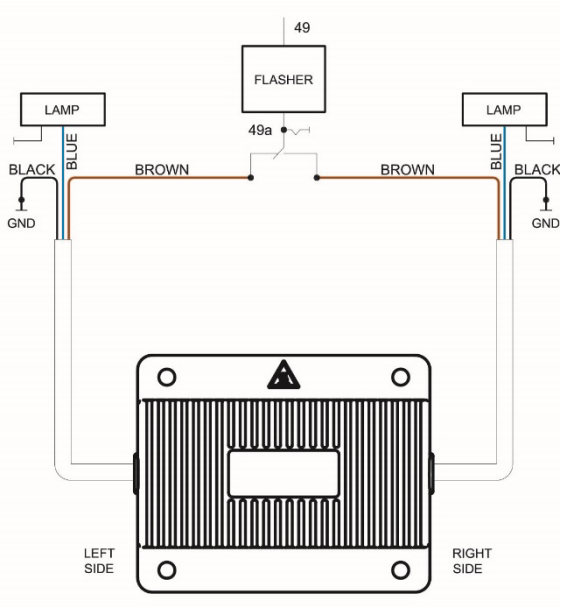

Installation / General prescriptions

- ✓ The installation of this device should only be undertaken by qualified electrician.
- ✓ Before starting installation or maintanance work ensure that the circuit is isolated from the supply by disconnecting the vehicle battery and withdrawing the circuit fuse or circuit breaker.
- ✓ Please disconnect the trailer plug, if existent, from the socket of the towing vehicle.
- ✓ Be sure to observe the warnings mentioned earlier.

Installation / Fixing

- ✓ The device must be fixed on a flat metal surface which has a heat sink function.
- ✓ The device must shall be mounted on a surface which are not exposed to strong vibrations.
- ✓ The device should be mounted in horizontal direction for optimal air circulation.
- ✓ The device must be positioned in water protected areas.
- ✓ Mount the device on a suitable metal surface at least with 4 screws.
- ✓ Connectors and connections boxes must be watertight.
- ✓ After the installation the correct function of the complete lighting system must be checked.